Assembly Drawing-1

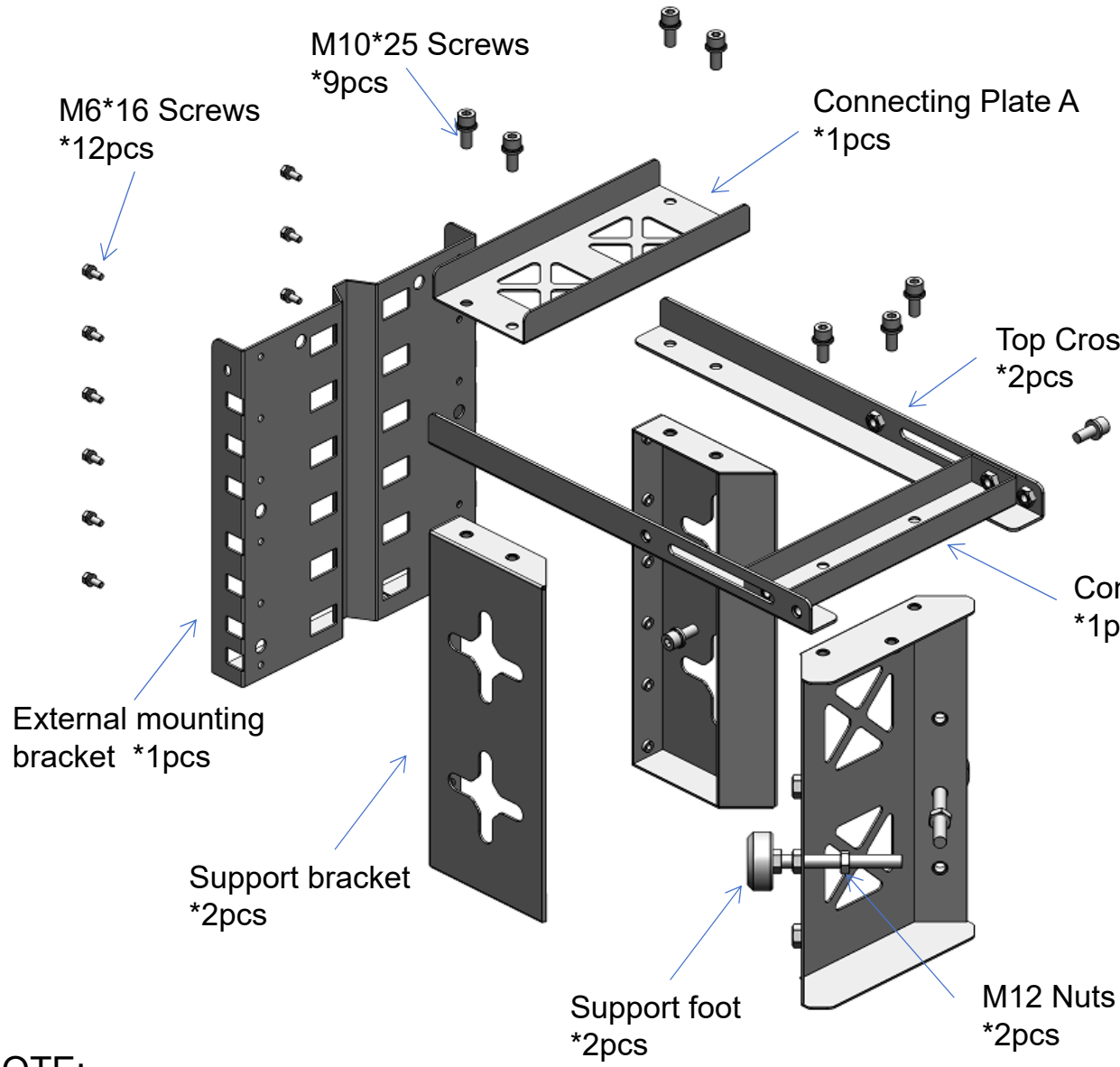

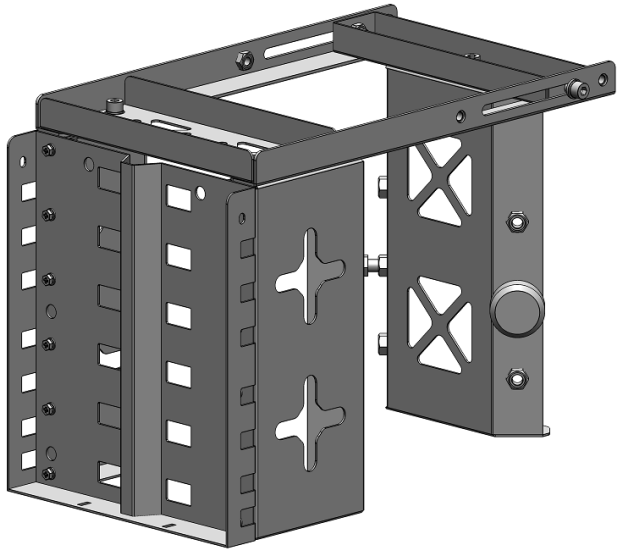

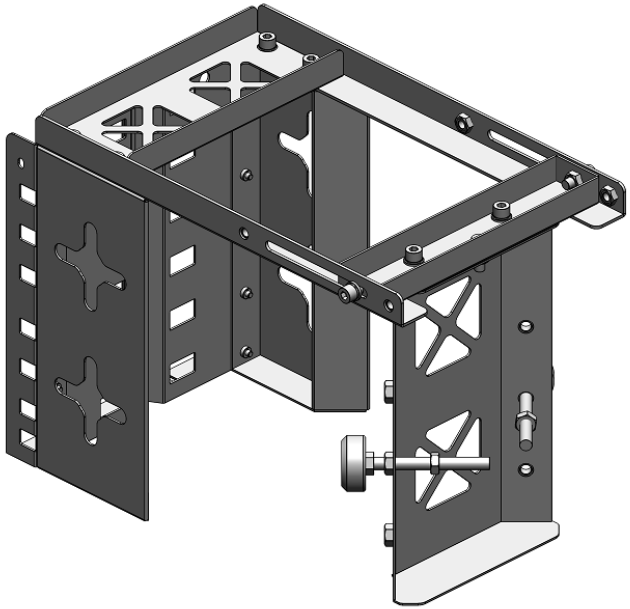

NOTE:

- Pre-assemble all components shown in this drawing.
- Pre-tighten all screws. Do NOT fully torque.
- Keep adjustment clearance for subsequent assembly steps.

Assembly Drawing-2

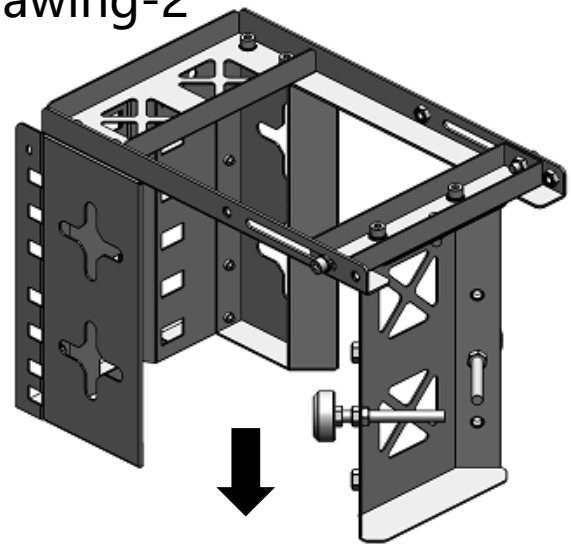

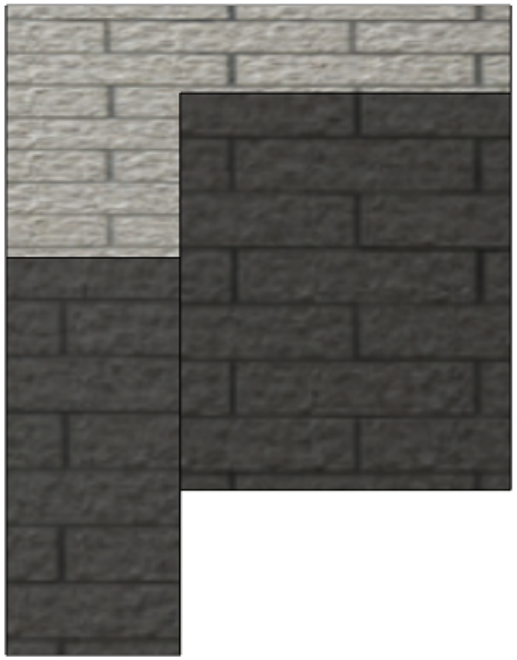

Applicable wall thickness:
100-200 mm

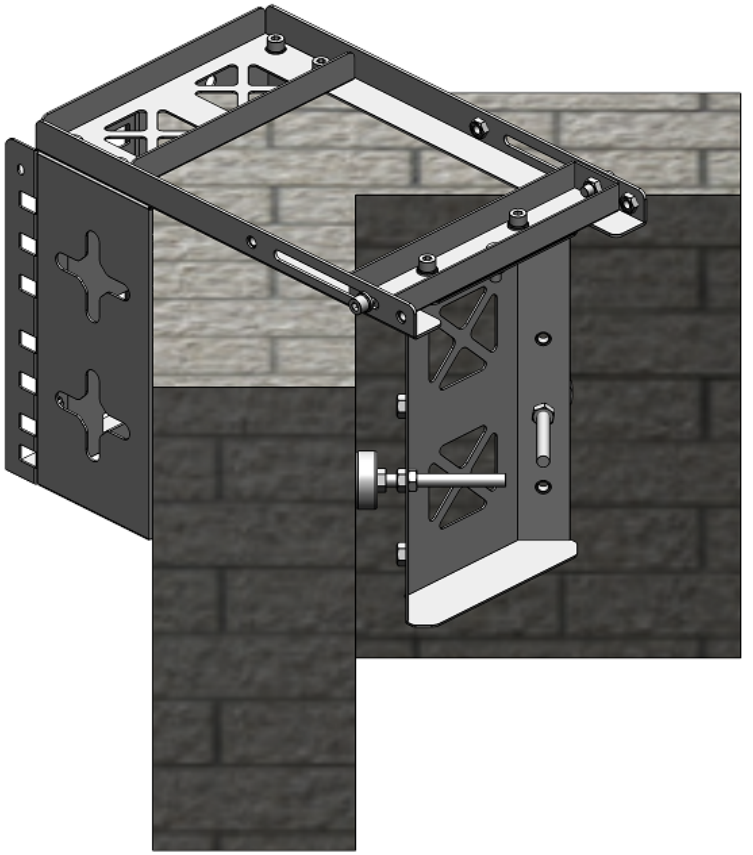

- This bracket is compatible with wall thickness ranging from 100-200 mm.
- If the wall thickness exceeds this range, please refer to Figure 3 for installation instructions.

⚠ SAFETY WARNING

- Wall thickness must stay within specified range. Out-of-range application will result in structural failure.
- Tighten screws and nuts to specified torque. Otherwise bracket may loosen and cause equipment falling hazard.
- After installation, verify bracket has no wobble or gaps. Do NOT mount equipment until inspection is passed.

Assembly Drawing-3

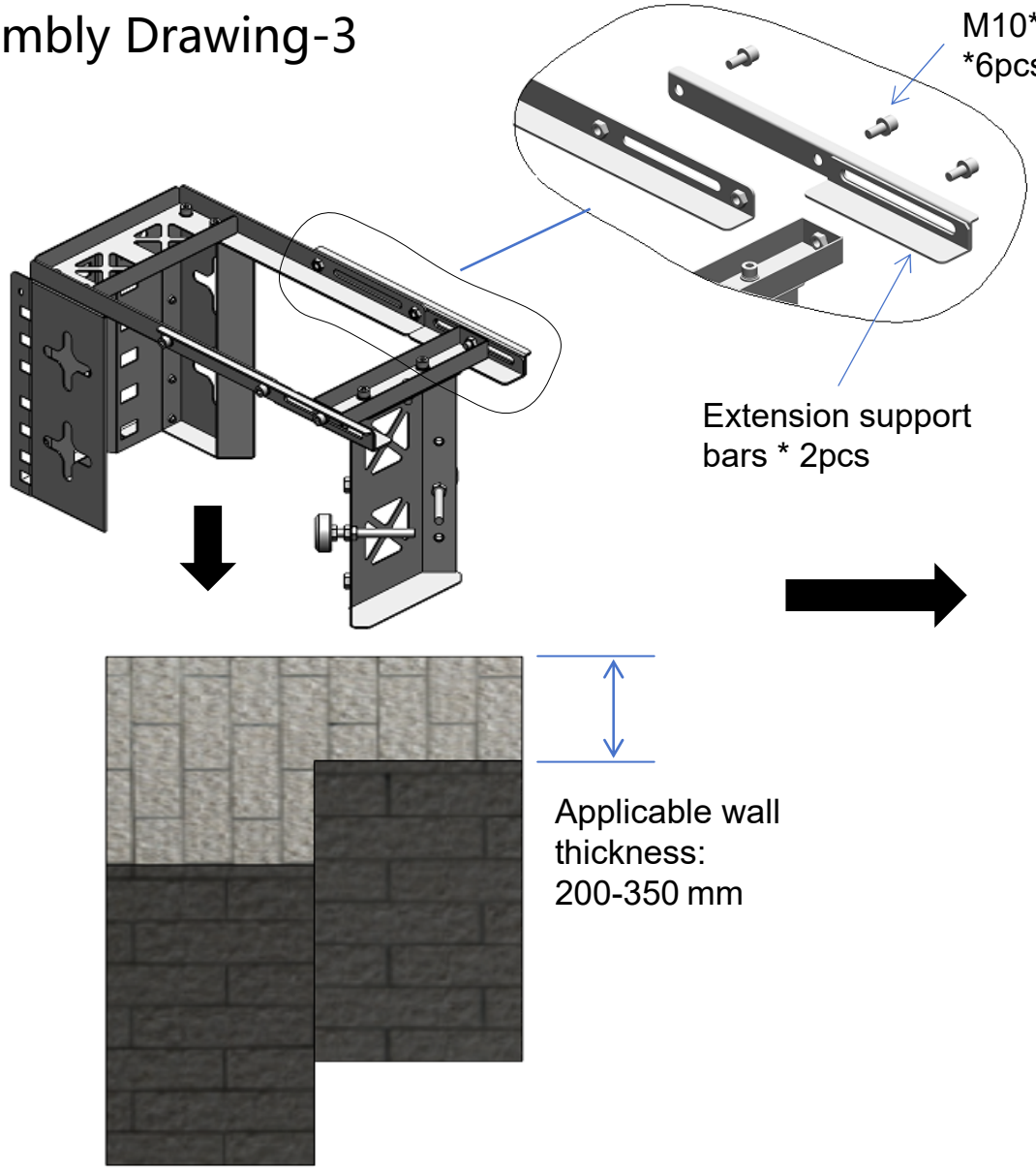

- This bracket is suitable for wall thickness ranging from 200-350 mm.
- The extension support bar assembly must be additionally fitted under this condition.

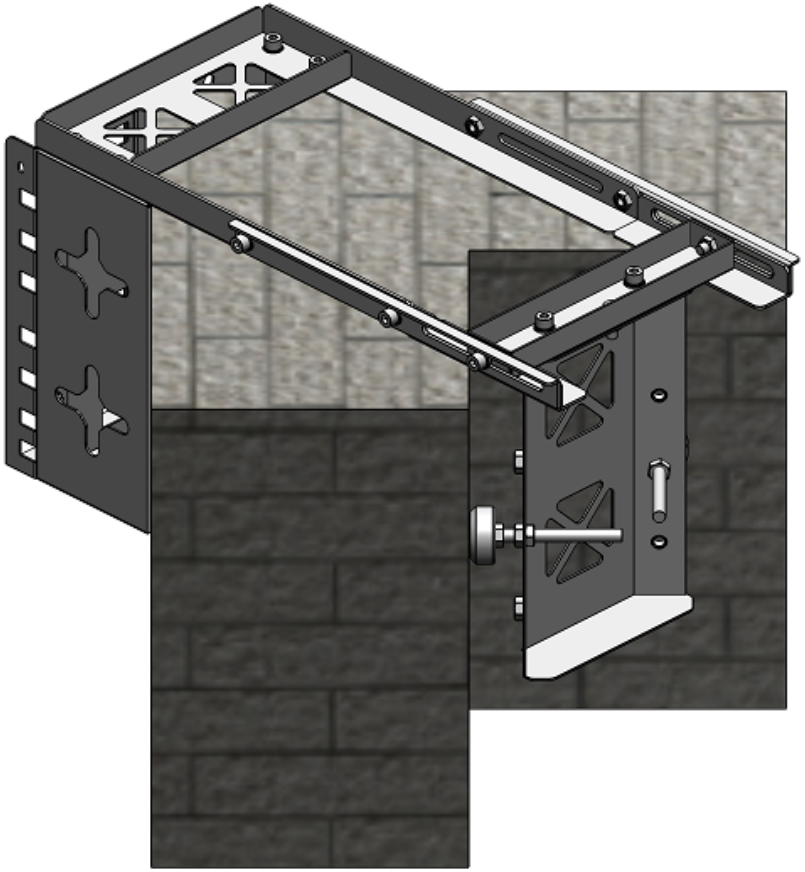

⚠ SAFETY WARNING

- Wall thickness must stay within specified range. Out-of-range application will result in structural failure.
- Tighten screws and nuts to specified torque. Otherwise bracket may loosen and cause equipment falling hazard.
- After installation, verify bracket has no wobble or gaps. Do NOT mount equipment until inspection is passed.

Assembly Drawing-4

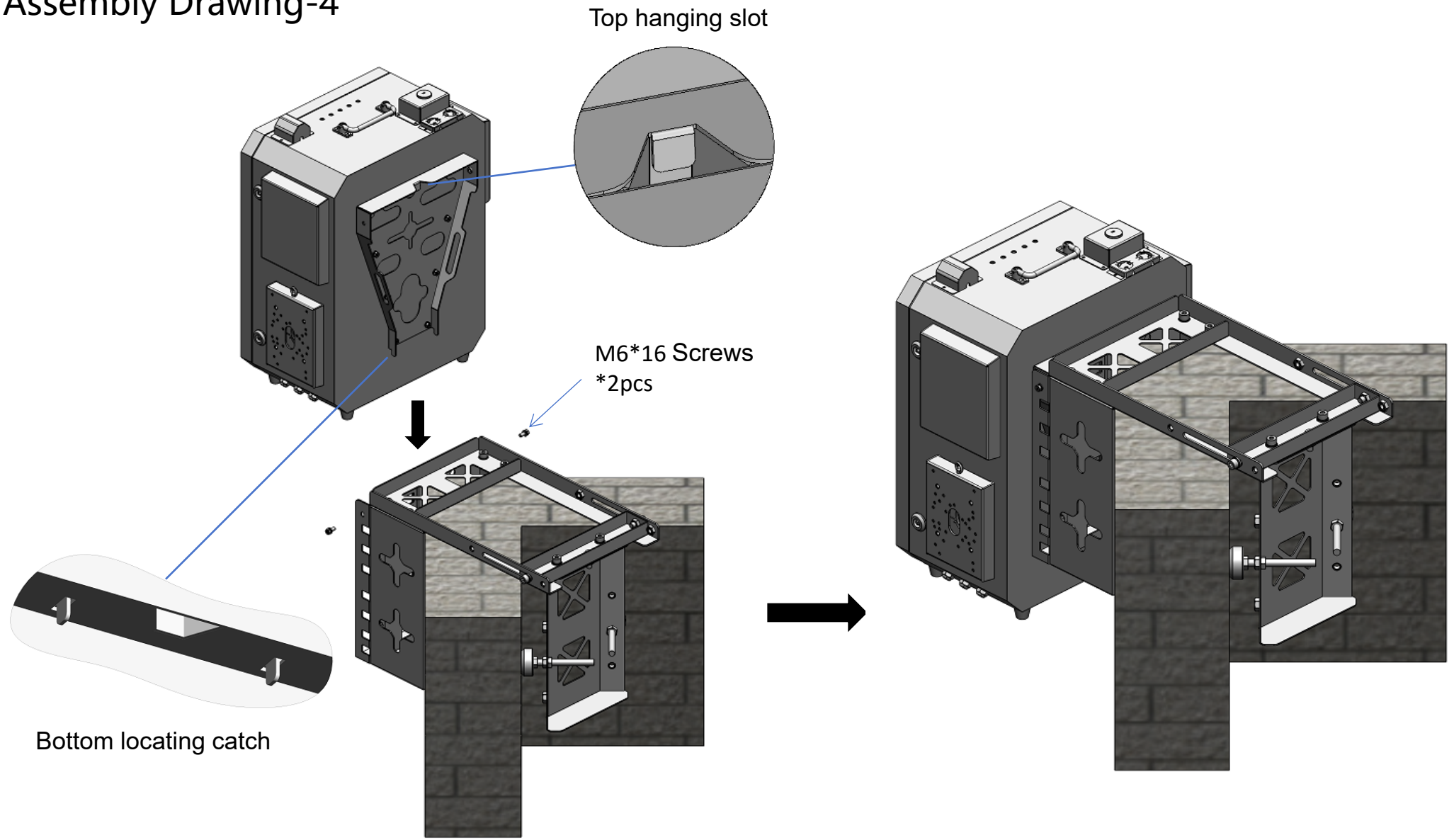

⚠ SAFETY WARNING

- When installing the unit, ensure the top hanging slot is securely hooked and the bottom locating catch is fully seated into the positioning hole.
- Tightening screws without full engagement will result in false mounting. Risk of unit falling, which may cause personal injury and equipment damage.